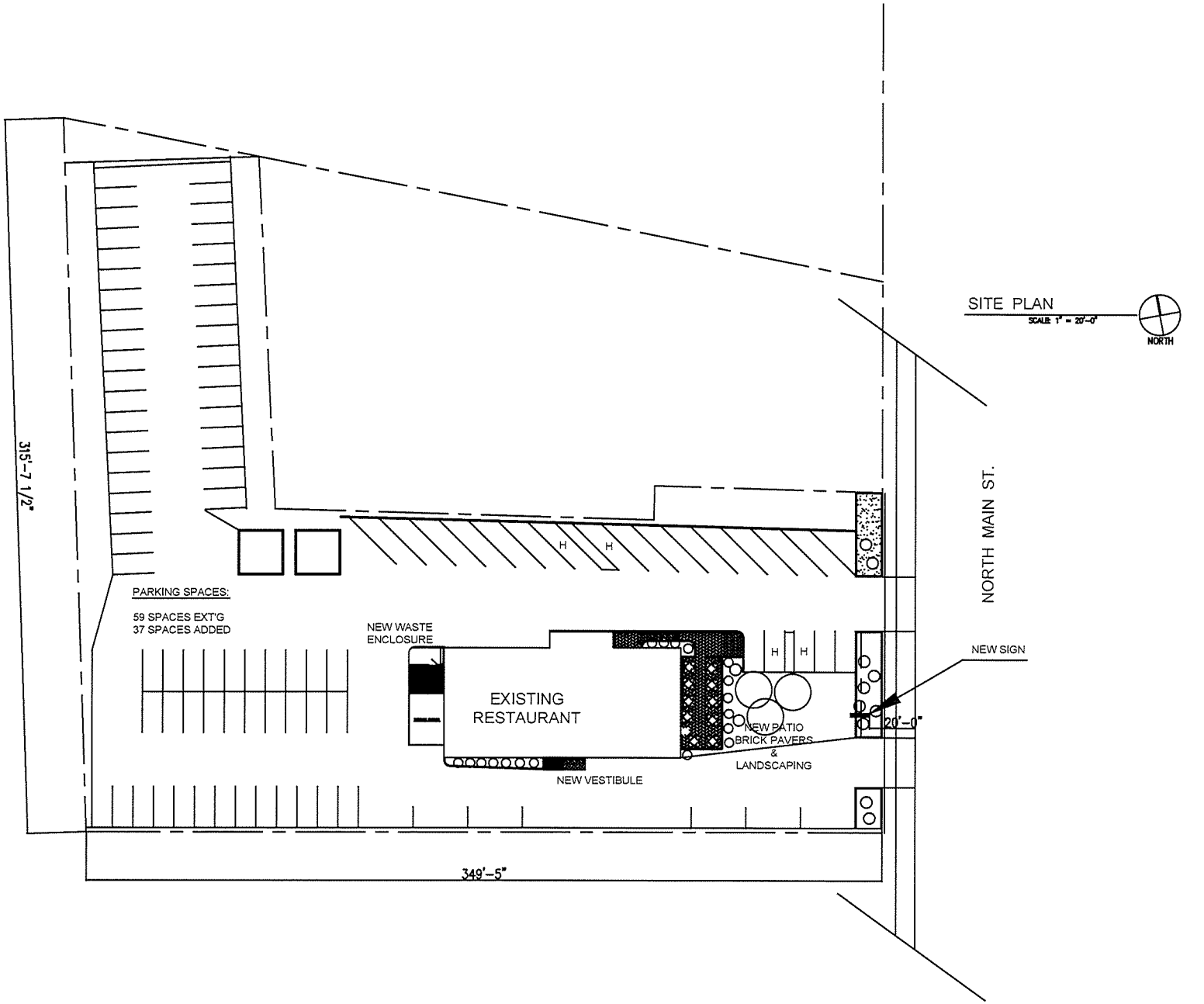

THOMAS D. THOMPSON ARCHITECT

1710 E. PRYOR AVE.
MILWAUKEE, WI 5320

(262) 825-855

tthompson48@wi.rr.c

GENERAL CONTRACTOR:

PROJECT NAME:

RESTAURAI ALTERATIO

OWNER:

TIMOTHY TRIANTAFILL(

PROJECT ADDRESS:

517 N. MAIN ST.
THIENSVILLE
WISCONSIN
53092

REVISIONS:

ARCHITECT'S PROJECT NUMBER:

DATE:

MAY 25, 2020

COPYRIGHT © 2010 THOMAS D. THOMPSON ARCHITECT

SHEET TITLE:

SITE PLAN

SHEET NUMBER:

A10C

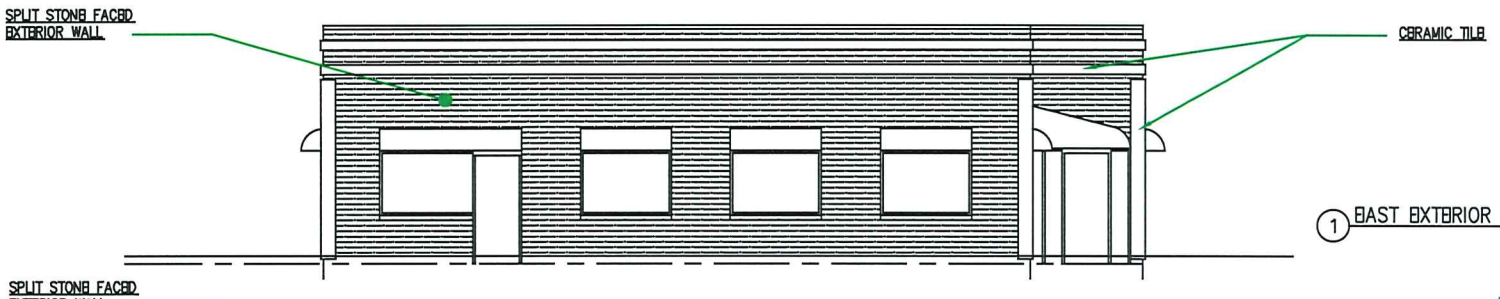

1 EAST EXTERIOR ELEVATION
SCALE: 1/4" = 1'-0"

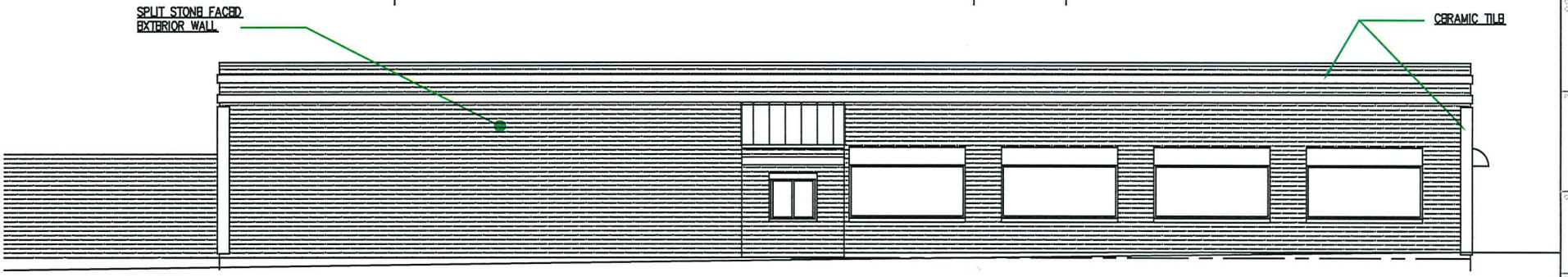

2 SOUTH EXTERIOR ELEVATION
SCALE: 1/4" = 1'-0"

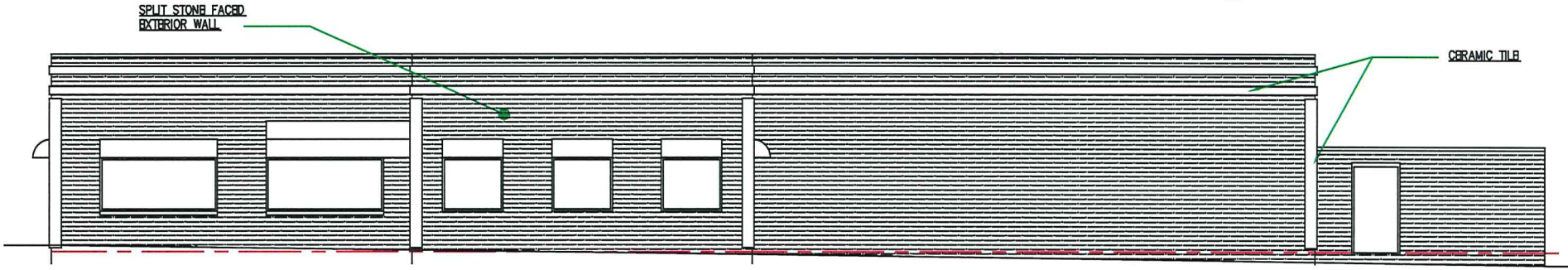

3 NORTH EXTERIOR ELEVATION
SCALE: 1/4" = 1'-0"

4 WEST EXTERIOR ELEVATION
SCALE: 1/4" = 1'-0"

NOTE:

SPLIT STONE VENEER AND TILE:
STONE VENEER TO BE MINNESOTA CAYON MOCHA APPLIED TO EXISTING EIFS EXTERIOR PER SUPPLIER'S SPECIFICATIONS.

THOMAS D. THOMPSON, ARCHITECT

1710 E. PRYOR AVE. #
MILWAUKEE, WISCON
53207

(262) 825-8550

tthompson48@wi.rr.cc

GENERAL CONTRACTOR

PROJECT NAME

RESTAURANT ALTERATION

OWNER

TIMOTHY TRIANTAFILLOU

PROJECT ADDRESS

525 N. MAIN S
THIENSVILLE,
WISCONSIN
53092

REVISIONS

ARCHITECT'S PROJECT NUMBER

DATE

MAY 15, 2020

COPYRIGHT ©
2020 THOMAS D. THOMPSON ARCHITECT

SHEET TITLE

EXTERIOR ELEVATION

SHEET NUMBER

A102

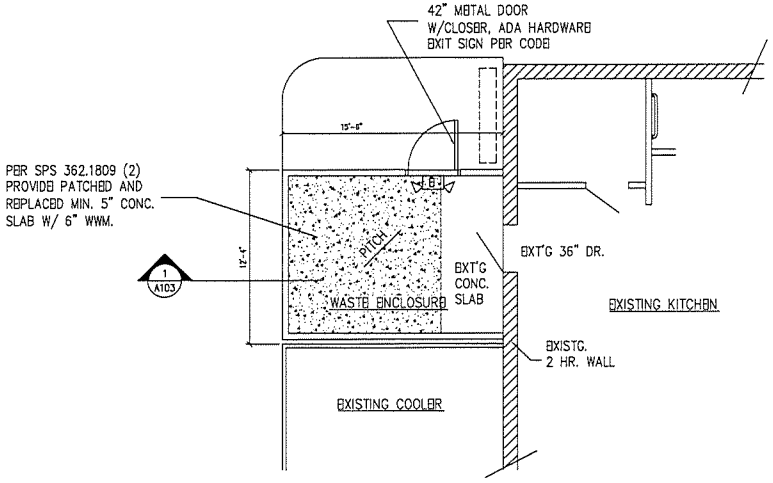

WASTE ENCLOSURE PLAN
SCALE: 1/4" = 1'-0"

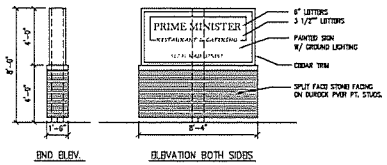

NEW SIGN PLANS
SCALE: 1/4" = 1'-0"

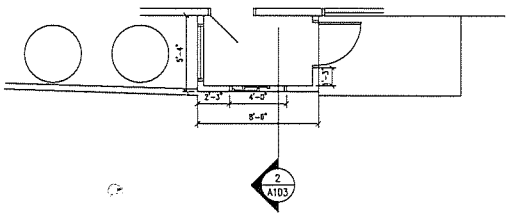

VESTIBULE PLAN
SCALE: 1/4" = 1'-0"

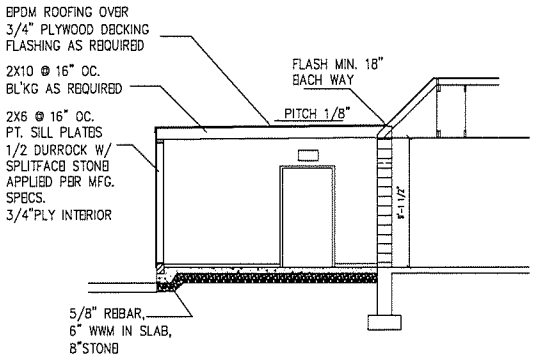

1 A103 SECTION
SCALE: 1/4" = 1'-0"

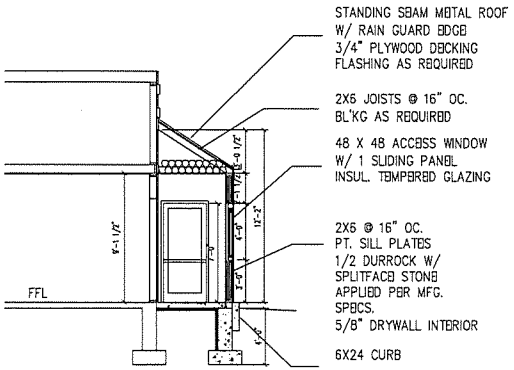

2 A103 SECTION
SCALE: 1/4" = 1'-0"

THOMAS D.
THOMPSON,
ARCHITECT

1710 E. PRYOR AVE. #2
MILWAUKEE, WISCONSIN
53207

(262) 825-8550

tthompson48@wi.rr.com

GENERAL CONTRACTOR

PROJECT NAME

RESTAURANT
ALTERATION

DRAWN BY

TIMOTHY
TRIANTAFILLOU

PROJECT ADDRESS

517 N. MAIN ST.
THIENSVILLE,
WISCONSIN
53092

REVISIONS

ARCHITECT'S PROJECT NUMBER

DATE

MAY 15, 2020

COPYRIGHT © 2020 THOMAS D. THOMPSON ARCHITECT

SHEET TITLE

SECTIONS
&
DETAILS

SHEET NUMBER

A103

BUILDING FLOOR PLAN

SCALE: 1/4" = 1'-0"

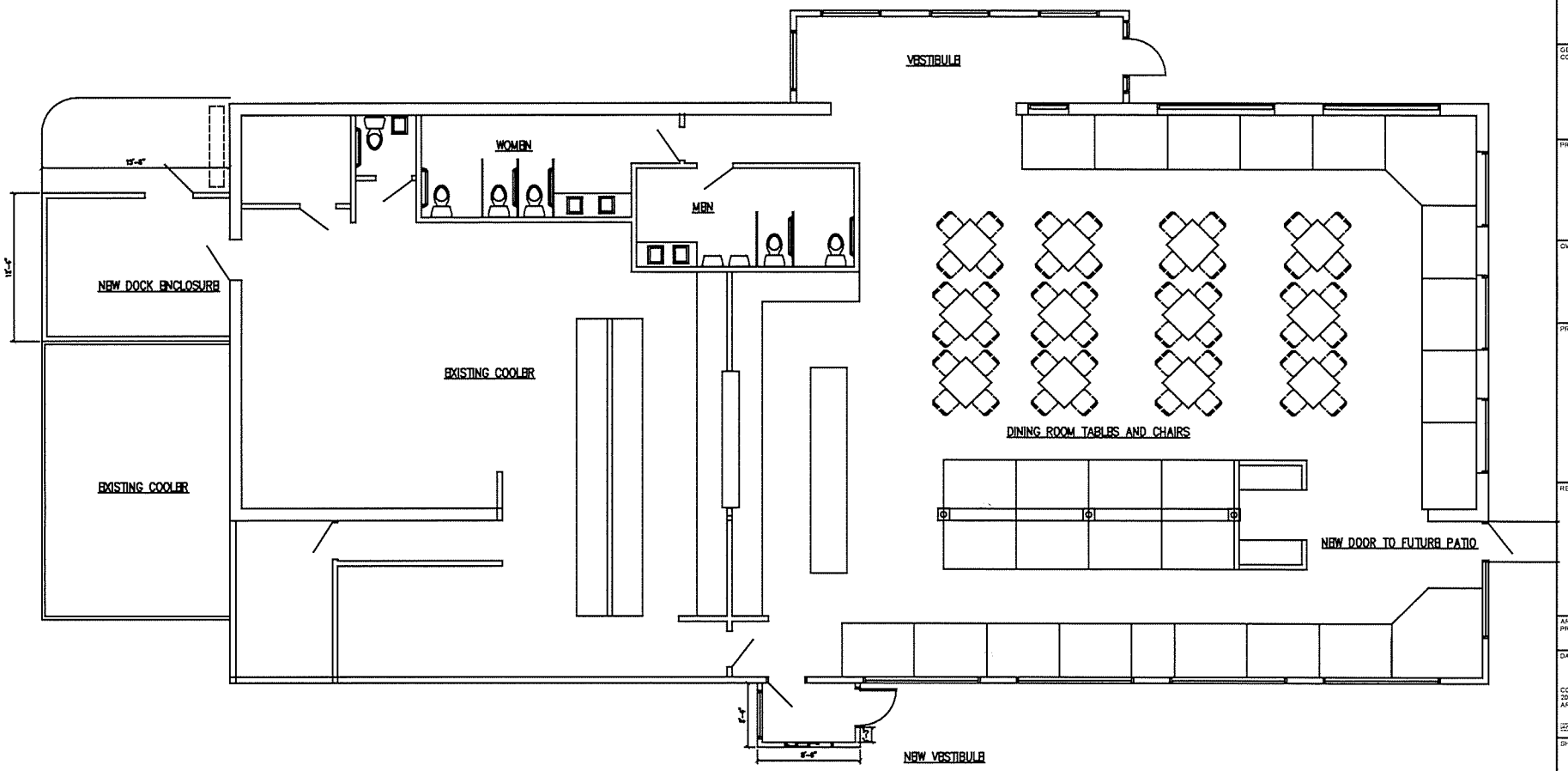

THOMAS D. THOMPSON, ARCHITECT

1710 E. PRYOR AVE. #2
MILWAUKEE, WISCONSIN
53207

(262) 825-8550

tthompson48@wi.rr.com

GENERAL CONTRACTOR

PROJECT NAME

RESTAURANT ALTERATION

OWNER

TIMOTHY TRIANTAFILLOU

PROJECT ADDRESS

525 N. MAIN ST.
THIENSVILLE, WISCONSIN
53092

REVISIONS

ARCHITECT'S PROJECT NUMBER

DATE

MAY 15, 2020

COPYRIGHT © 2020 THOMAS D. THOMPSON ARCHITECT

SHEET TITLE

EXTERIOR ELEVATIONS

SHEET NUMBER

A101